coats®

— OPERATING INSTRUCTIONS —
— PARTS LIST —

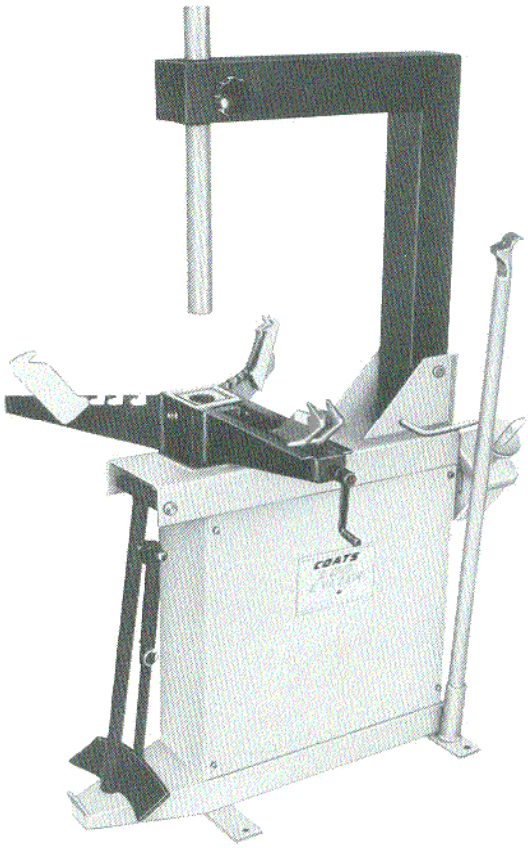

200 CYCLER / 220

PANZITTA SALES & SERVICE
72 George Avenue
Wilkes-Barre, PA 18705
570-822-6720 800-822-6720
www.panzittasales.com

108737

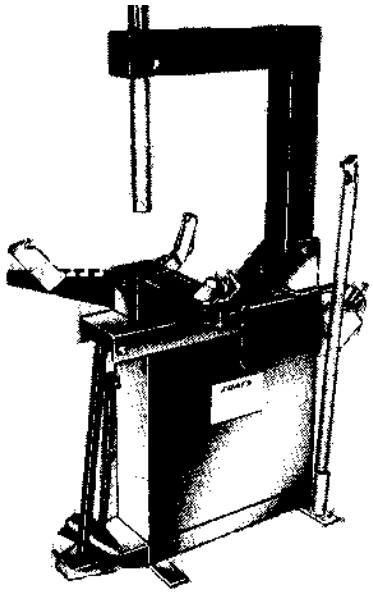

200 CYCLER/ 220

This Parts List is for
units with
Serial No. 200-01,326 and up
Serial No. 220-00,001 and up

Manufactured by The Coats Company

PANZITTA SALES & SERVICE
72 George Avenue
Wilkes-Barre, PA 18705
570-822-6720 800-822-6720
www.panzittasales.com

Ref. No.	Part No.	Description
1	107015	Chassis
2	107378	Bead Loosener Pin
3	101001	3/4" Snap Ring (Ea.)
4	107411	Bead Loosener Handle
5	103740	3/8" x 2 Cap Screw
6	102937	3/8" Locknut N. F.
7	107417	Adjusting Tube
8	107416	Shoe
9	107418	Cotterless Hitch Pin
10	107426	Side Panel
11	108017	Warning Decal
12	106301	1/4" Hex Whiz Self Tapping Bolt (Ea.)
13	107043	Screw
14	101181	3/16" x 1 Roll Pin
15	101017	1/8" x 5/8" Roll Pin
16	107090	Handle Screw
17	107091	Grip Screw Handle
18	101253	Machine Bushing
19	106300	3/8 Hex Self Tapping (Ea.)
20	105131	3/8" 1-1/4" Self Tapping Bolt
21	107560	Slotted Nut
22	107559	M.C. Clamp Assembly
23	107158	Clamp Assembly (Ea.)
24	107034	Table Top
25	107562	Auto Clamp Assembly (220)
26	107049	Clamp Assembly (Ea.) (220)
27	107063	Fulcrum Tube
28	107056	Pivot Arm
29	107064	Knob Locking
30	107377	E-Ring (Ea.)
31	107052	Pivot Arm Pin
32	104945	1/4" x 1" Cap Screw (Ea.)
33	107066	Rub Block
34	107070	Shim Assortment
35	106259	Lube Bottle
36	000490	Lube Bracket
37	000491	Lube Applicator
38	107107	Grip
39	107423	Combo Tool Protector Set (6 Mount & Demount)
40	107156	Combo Tool
41	107424	Clamp Pads (6 Sets of 6)
42	108059	Inflation Warning Decal
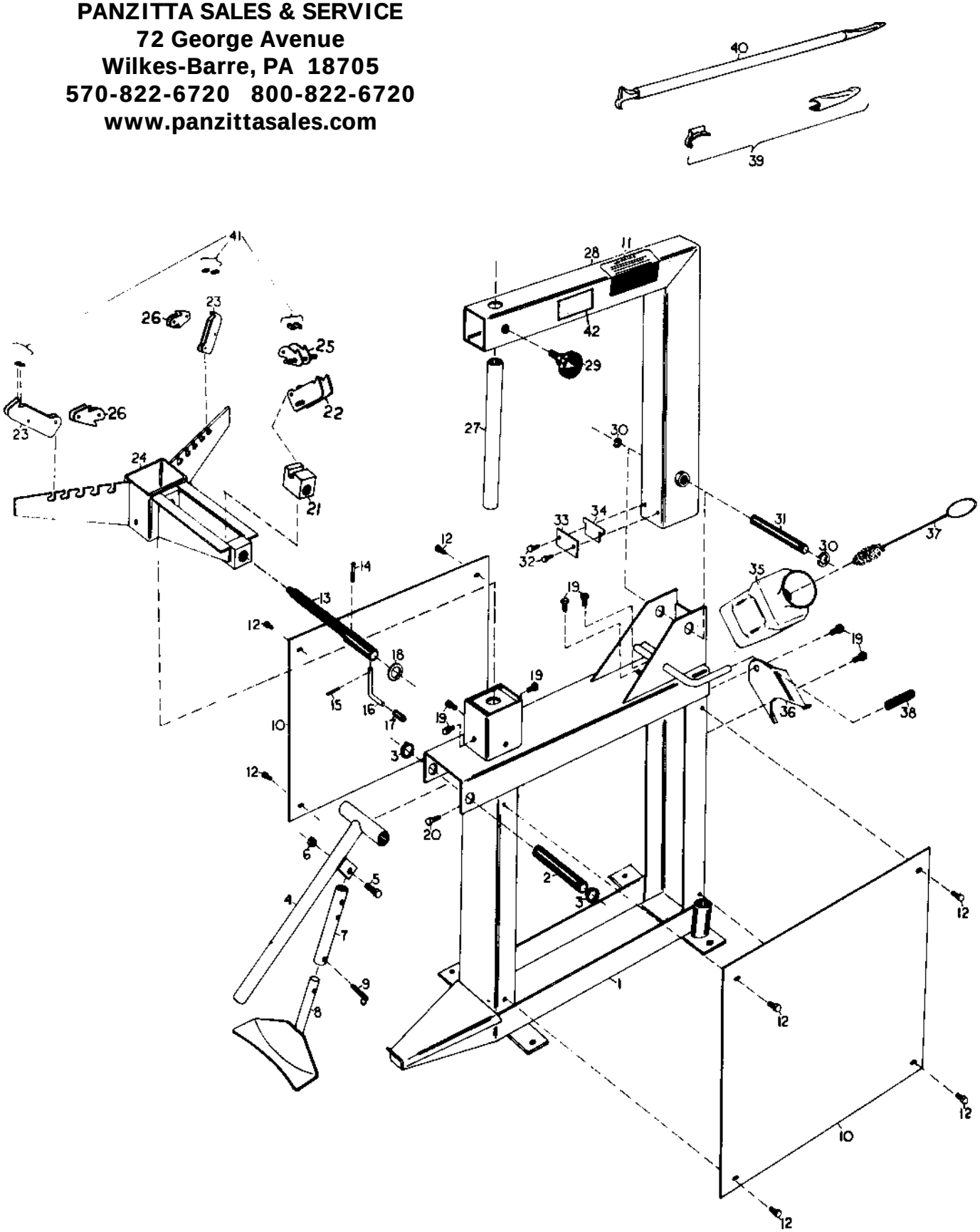
PANZITTA SALES & SERVICE
72 George Avenue
Wilkes-Barre, PA 18705
570-822-6720 800-822-6720
www.panzittasales.com